madimack

Powered by invermac TECHNOLOGY

ecoSAUNA



INSTALLATION MANUAL

This manual provides installation, operation, and maintenance instructions for the Madimack outdoor sauna range. Please read thoroughly before installation or operation.

1 SAFETY INFORMATION

- Installation and electrical connections must be performed by a licensed electrician in accordance with AS/NZS 3000.
- Maintain minimum 500 mm clearance around the heater. Never cover the heater or dry towels/clothing inside the sauna.
- Ensure proper ventilation – air must circulate freely around the heater and through the sauna.
- Do not operate if wiring, stones, or wall panels are damaged.
- Keep children away from the heater when operating.
- Use only clean, fresh water when pouring over stones. Do not use chlorinated, seawater, or aromatic oils not approved for sauna use.

Required Safety Clearances

(500 mm minimum clearance around the heater, 100 mm floor gap for junction box, and 100 mm ceiling space from sensor.)

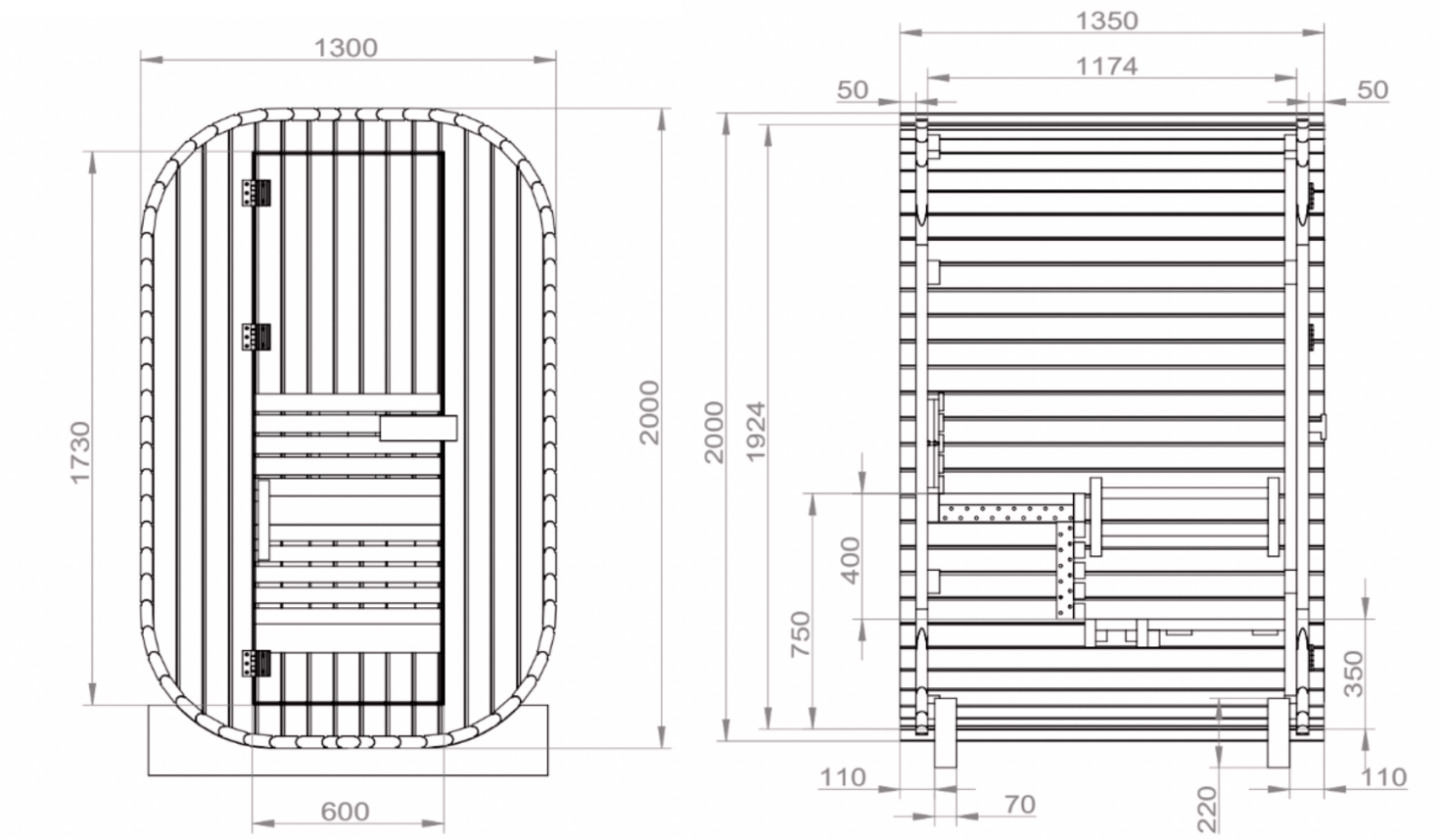

2 TOOLS & COMPONENTS

Tools Required

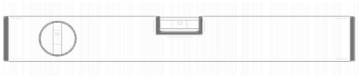

Spirit



Screwdriver



Wrench

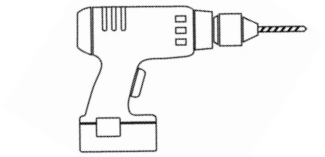

Cordless Drill



Rubber

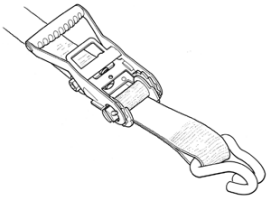

Ratchet

Supplied Components

1. Base platform
2. Wall panels (convex/concave)
3. Door panel
4. Roof/top panel
5. Bench & backrest
6. Stainless steel bands
7. Harvia BC heater and control unit
8. LED lights
9. Door handle
10. Sauna Sign
11. Sauna Bucket and Ladle
12. Sauna thermometer
13. Sauna sand timer
14. Sauna aroma cup
15. Sauna stones
16. Sauna clothes holder

3 INSTALLATION STEPS

Step 1: Base Placement

Place the base on a level surface. Ensure the foundation is stable and moisture-protected.

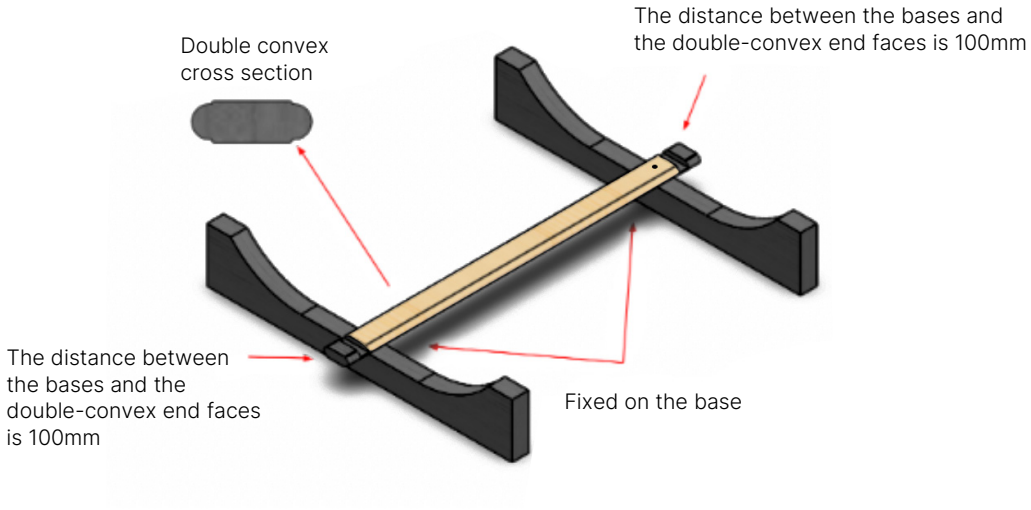

1: Reference position: Align the base and reinforce the double-convex wall panel at the center of the base, with the end face of the double convex panel 100mm away from the base.

Step 2: Wall Assembly

Align and install the double-circle convex wall panels into the base grooves.
Use a level to check vertical alignment.

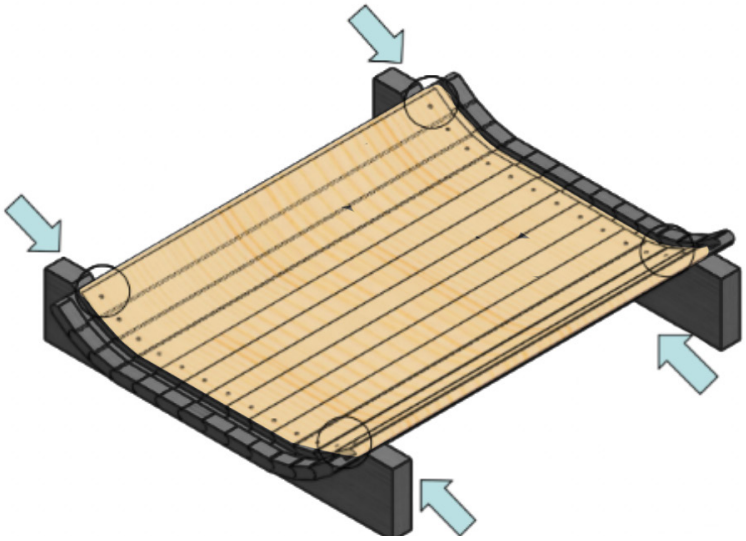

2: After tightening the wall panel, screw the screws into the position indicated by the black circles to reinforce the base.

Step 3: Panel Securing

Screw the wall panels into the indicated anchor points. Do not over-tighten.

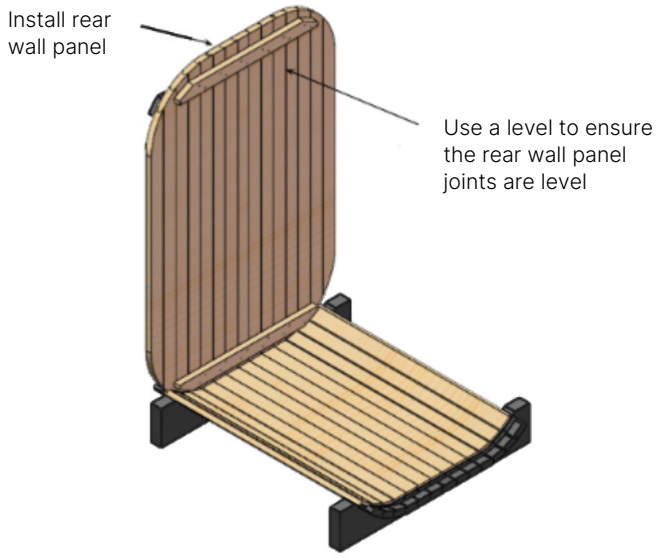

3: Insert the rear panel into the wall recess.

Step 4: Door & Rear Panel

Insert the front door panel and rear wall panel into wall grooves. Ensure the door panel sits flush and level.

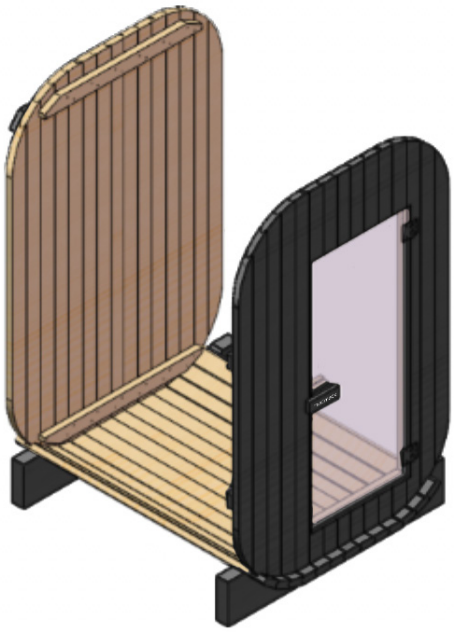

4: Insert the square front door panel into the wall recess.
Use a level to ensure the door panel connector is level.

3 INSTALLATION STEPS

Step 5 and 6: Roof Panel

Fit the roof panels into the wall grooves. Secure evenly around edges.

Double circular
conclave cross section

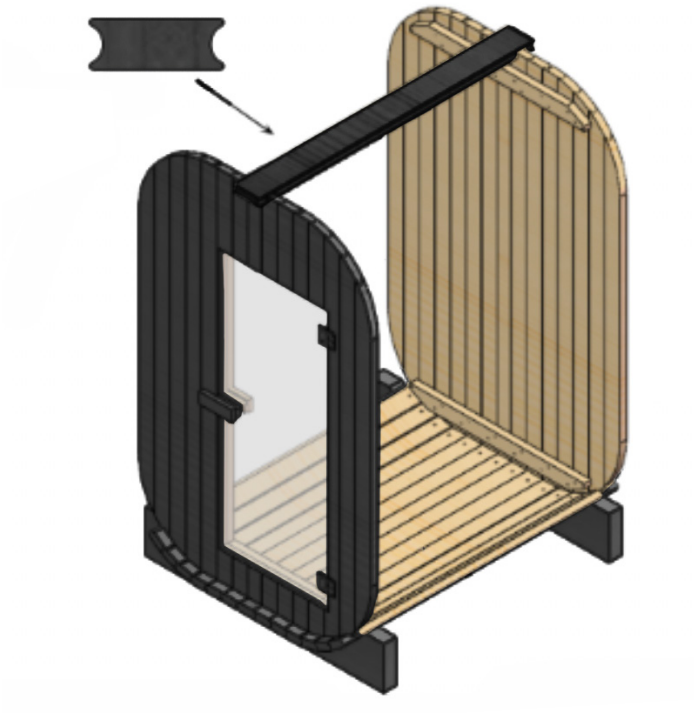

5: Install double circular recesses at the top to secure the front and rear door panels together.

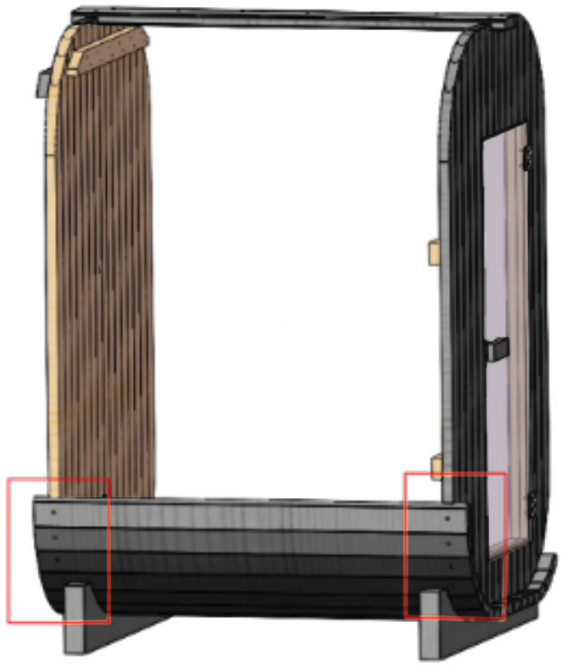

6: Install the wall panels and fix them to the square door panel with screws.

Step 7 and 8: Stainless-Steel Bands

Wrap the bands around the sauna exterior and tighten evenly using a wrench.
This ensures wall panels seal firmly.
(See Diagram F – Band Installation Sequence)

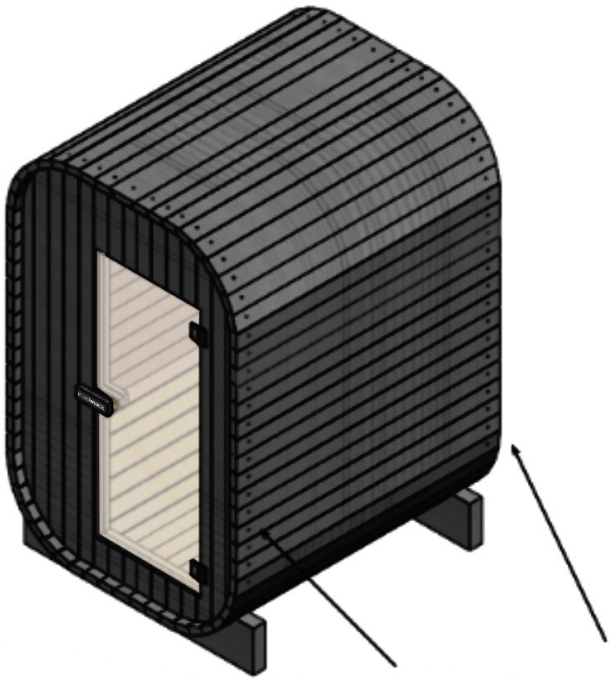

7: Secure the wall panel to the square door panel with nails until the square door panel no longer falls off.

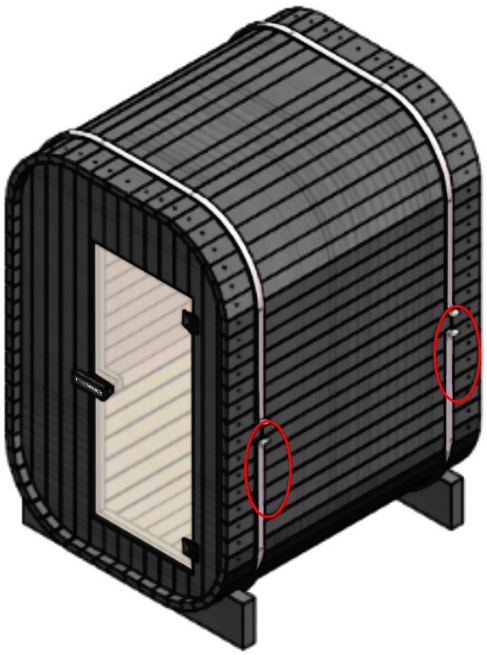

8: Install the stainless steel bands and tighten with a wrench, then eliminate any gaps between the wall panels by tightening.

3 INSTALLATION STEPS

Step 9, 10 and 11: Bench & Backrest
Position the bench and backrest onto the connectors. Secure with screws or place freestanding.

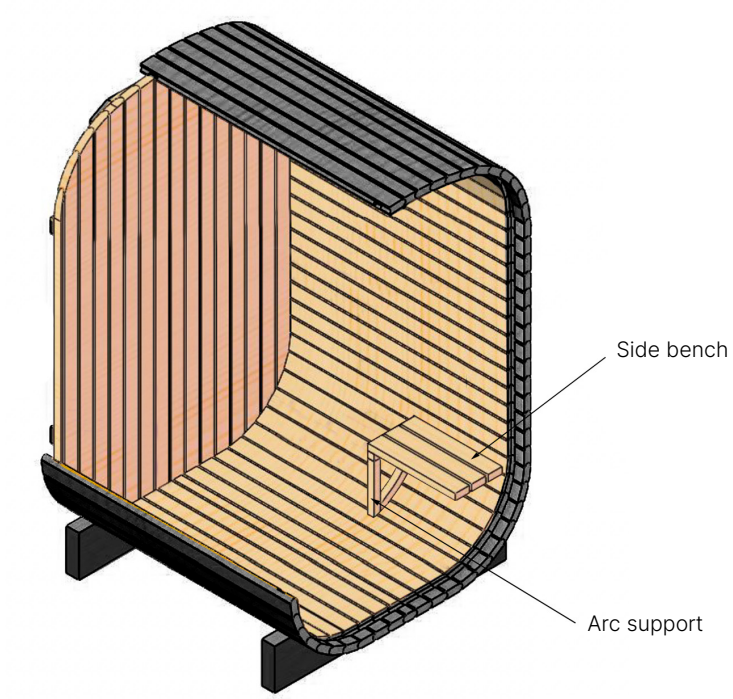

9A: Install the curved support and side footrest, and fix the support to the wall panel with screws.

9B: Screw the wall panel connector to the wall to ensure all sides of the bench are level

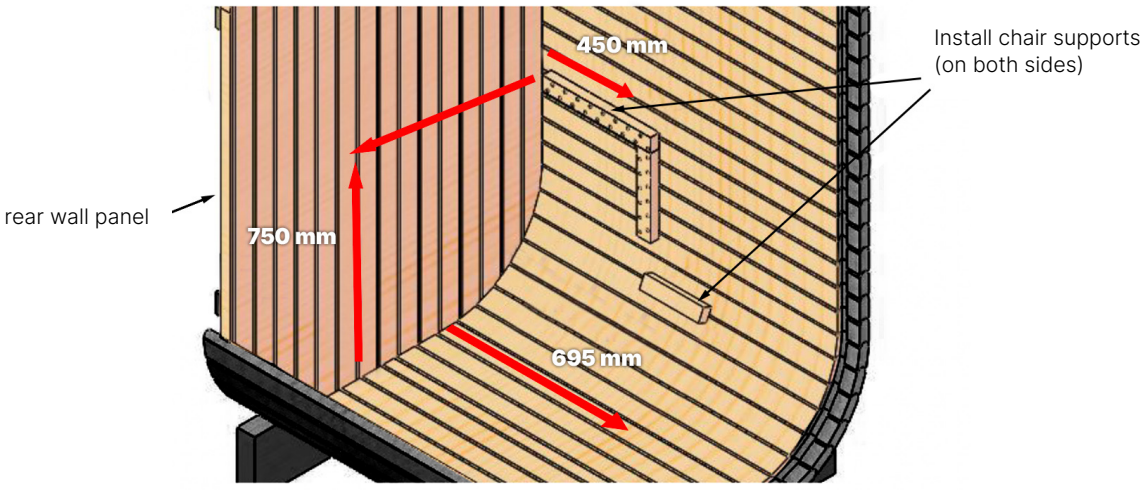

10: Secure the chair support to the wall panel using screws to ensure that all surfaces of the bench are on the same horizontal plane.

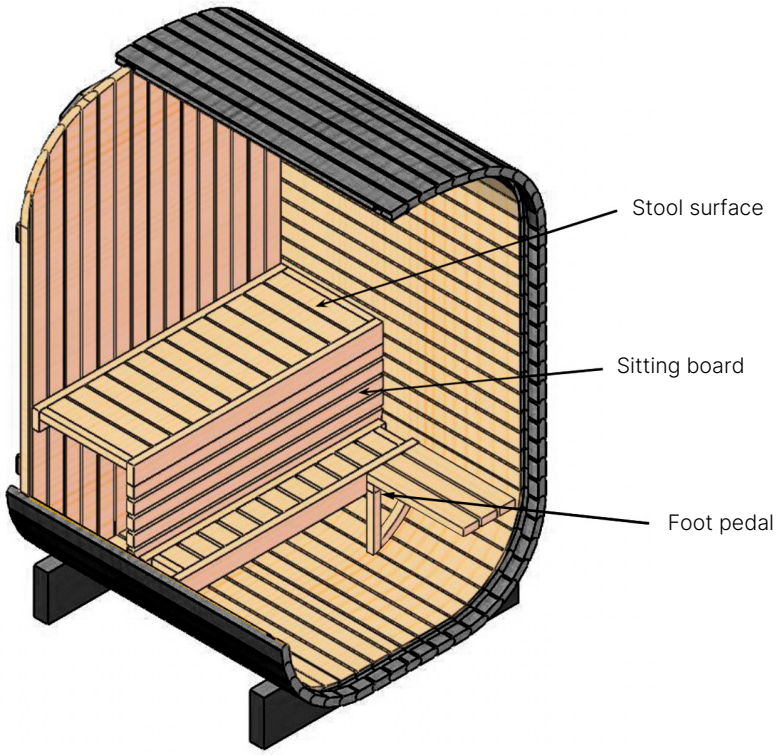

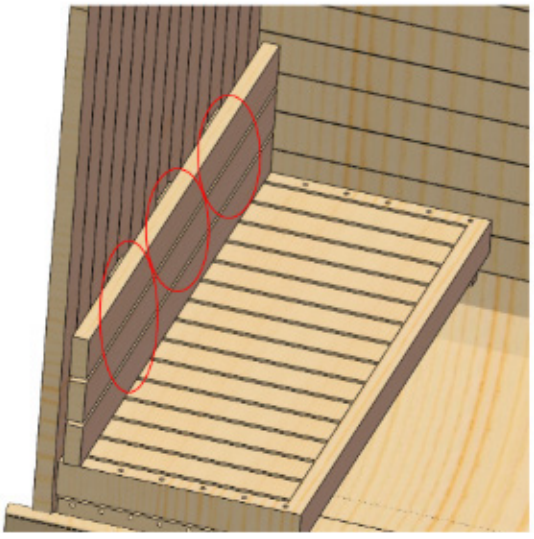

11: Install the stool seat, seat board, and footrest onto the support, and secure them with screws.

3 INSTALLATION STEPS

Step 12 and 13: Backrest & Mounting of Electric Stove

Position the bench and backrest onto the connectors. Secure with screws or place freestanding.

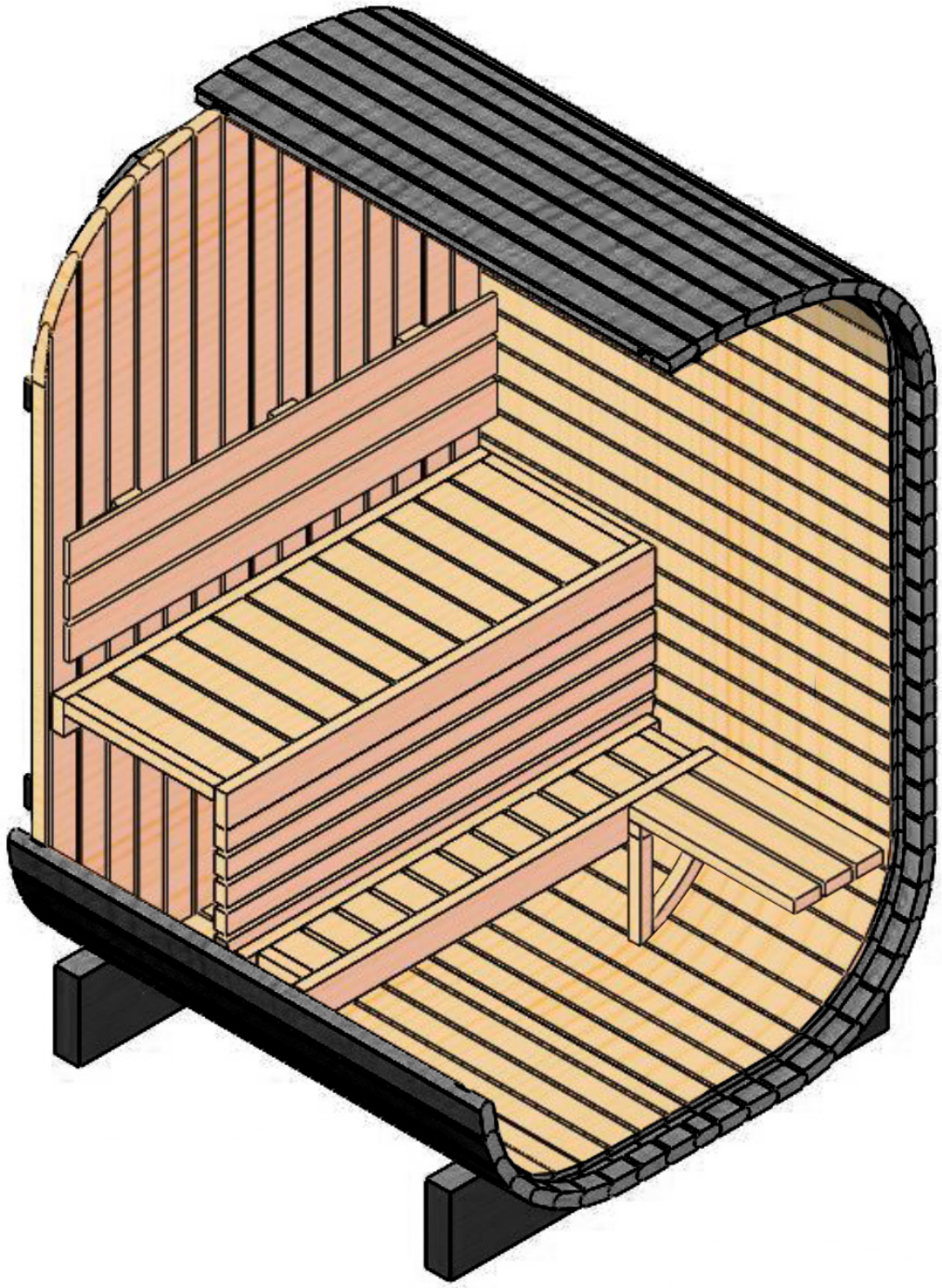

12: Install the backrest onto the bench and reinforce it to the wall with screws in the gaps.

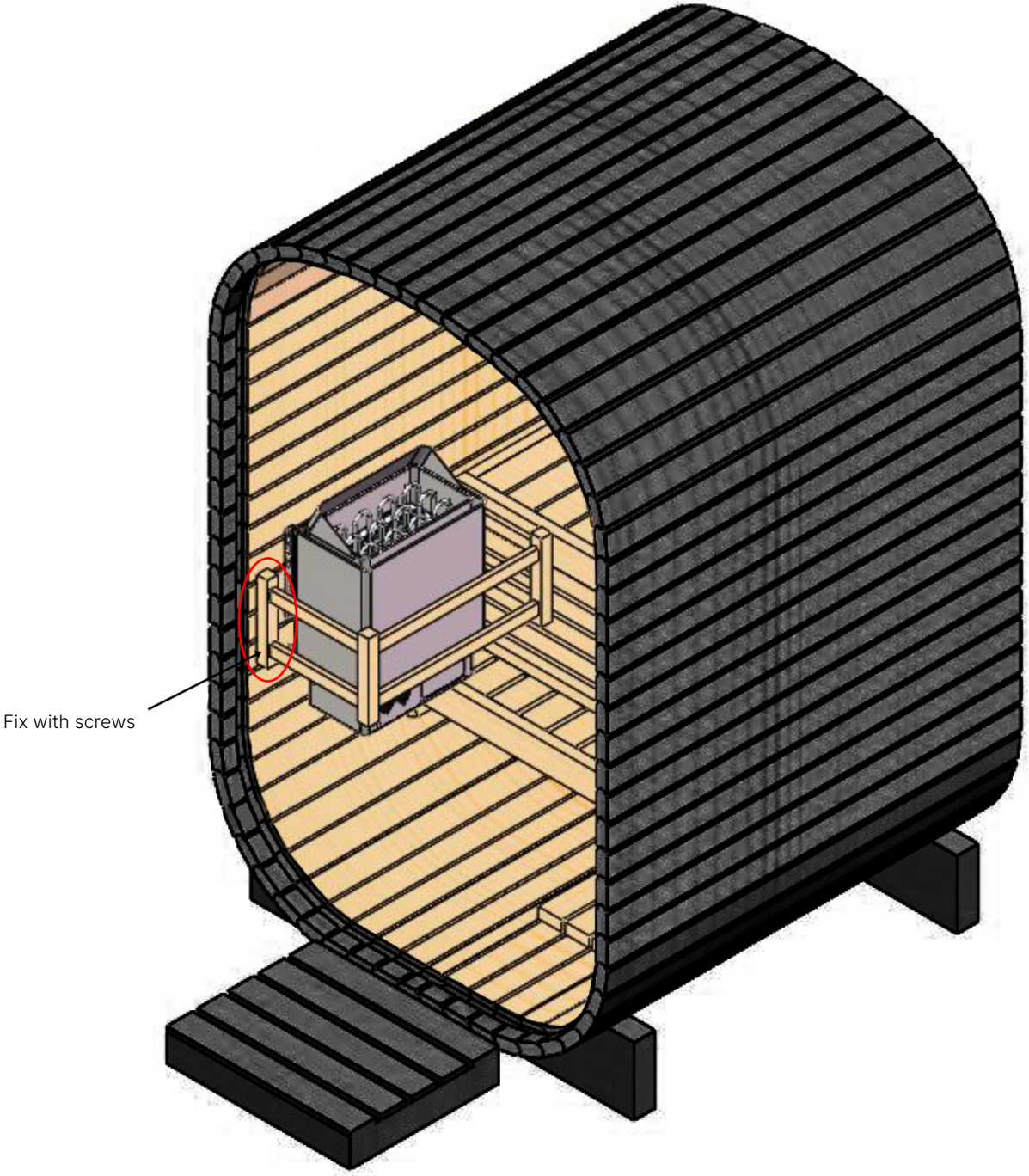

13: Mount the electric stove frame and stove on the wall and secure them with screws; Installation complete.

4 HEATER MOUNTING

Install the heater mounting bracket per Madimack

Madimack ecoSAUNA video installation link

Visit the Madimack website for more information



Electrical & Heater Setup

- The heater must be installed in accordance with Madimack specifications and Australian electrical standards.
- Maximum junction box height: 500 mm from floor.
- Connect only to a dedicated RCD-protected circuit.
- Mount the temperature sensor 100 mm from the

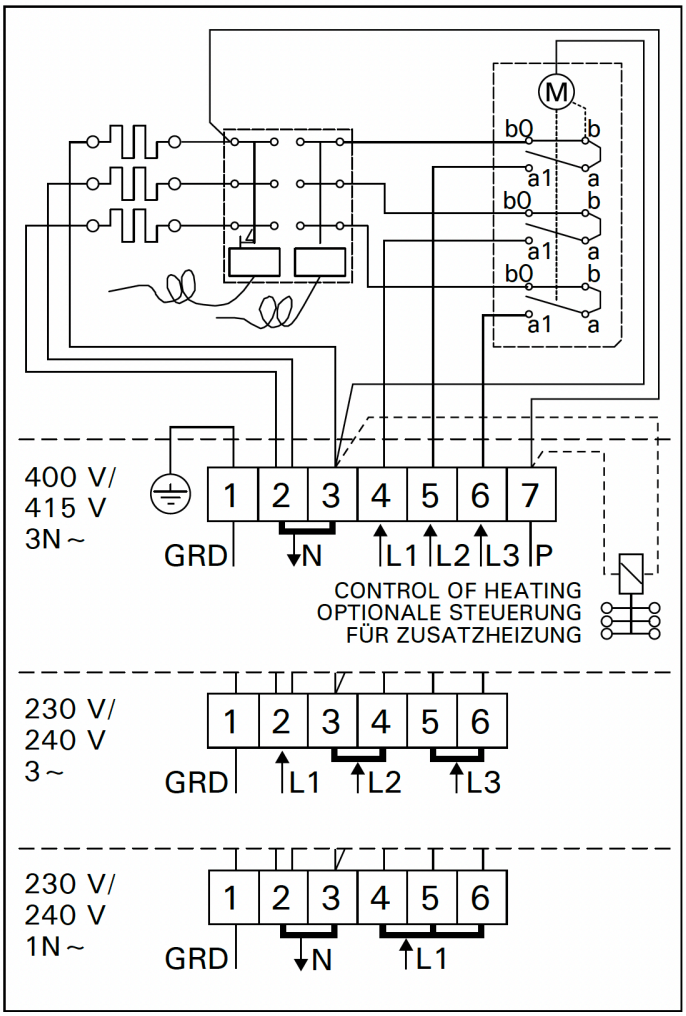

Figure 10. Electrical connections of BC heater

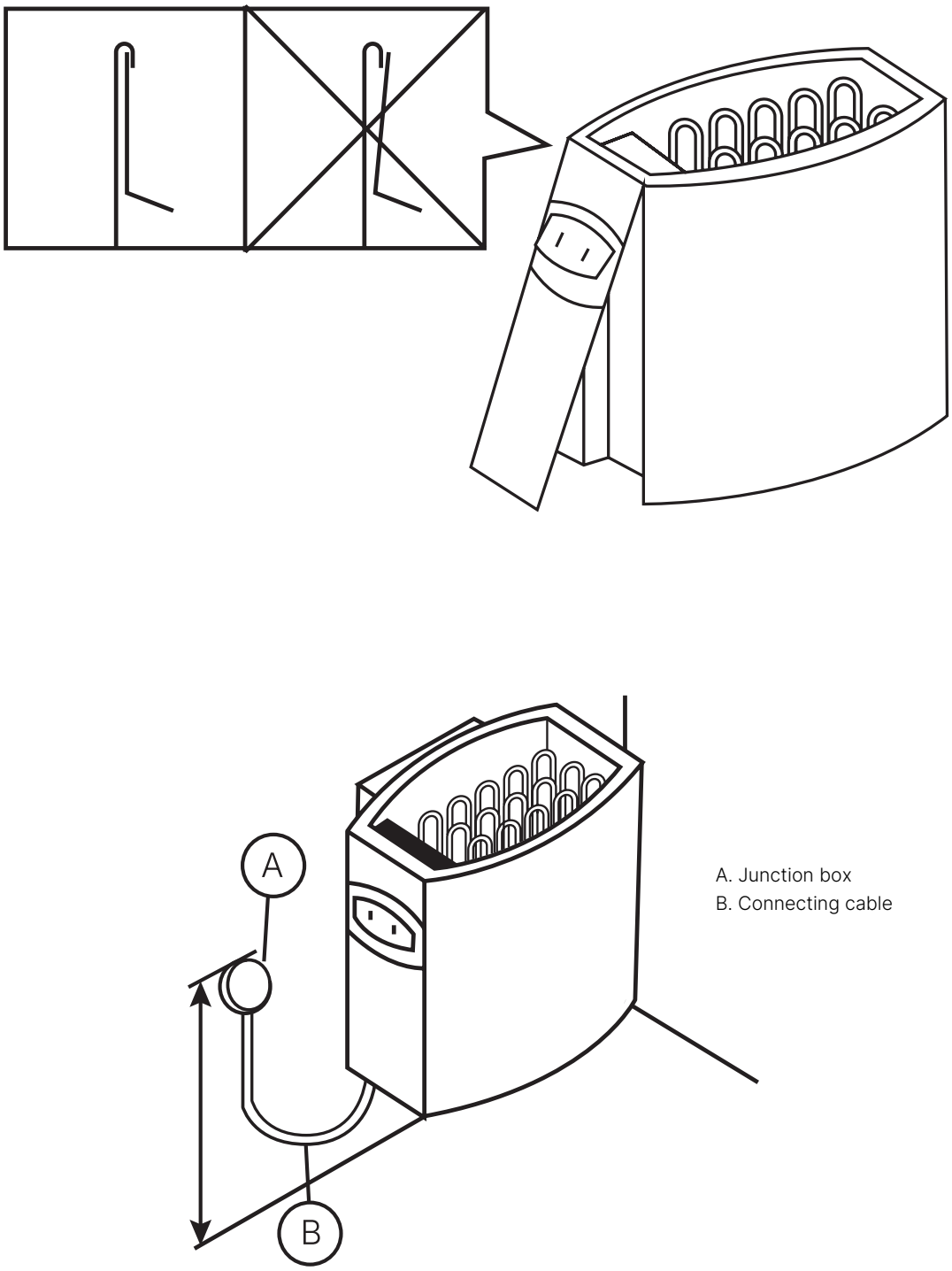

Figure 8. Closing the cover of the connection box (all dimensions in millimeters)

5 OPERATING INSTRUCTIONS

1. Ensure sauna is clear of any objects.

2. Set the timer switch to the ON position (0–4 hours). Heater starts heating.

3. Adjust thermostat to desired temperature (recommended 65–80 °C).

4. For pre-set start, use timer's "pre-setting" range (0–8 hours).

5. Allow sauna to heat for 45–60 minutes before use.

6. Pour no more than 0.2 L of water at a time on stones.

7. Turn heater OFF after use.

Diagram H: Control Knobs & Operation

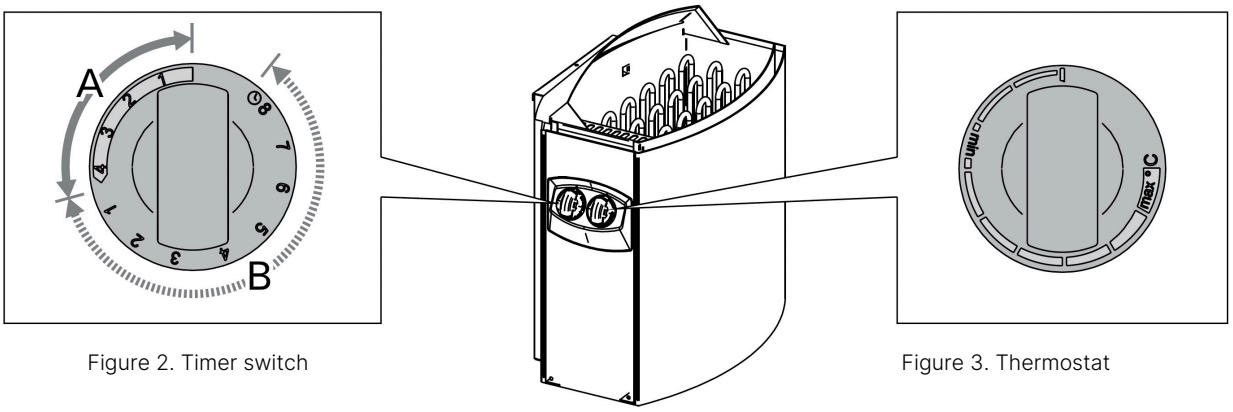

Figure 2. Timer switch

Figure 3. Thermostat

1.3.1 Heater On

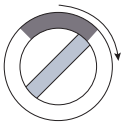

Turn the timer switch to the "on" section (section A in figure 2, 0-4 hours). The heater starts heating immediately.

1.3.2 Pre-setting Time (timed switch-on)

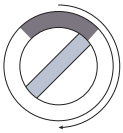

Turn the timer switch to the "pre-setting" section (section B in figure 2, 0-8 hours). The heater starts hearing when the timer has turned the switch back to the "on" section. After this, the heater will be on for about four hours.

Example: You want to go walking for three hours and have a sauna bath after that. Turn the timer switch to the "pre-setting" section at number 2.
The timer starts. After two hours, the heater starts heating. Necause it takes about one hour for the sauna to be heated, it will be ready for bathing after about three hours, that is, when you come back from your walk.

6 ROOF SHINGLES INSTALLATION

See YouTube video





7 MAINTENANCE & CLEANING

- After each use: Leave the door open to ventilate and dry the interior.
- Every 6 months: Clean benches, walls, and floor with mild non-chlorinated cleaner.
- Annually: Re-stack stones, replace broken ones, and remove dust.
- Inspect wiring and heater terminals for corrosion or wear.

Maintenance Checkpoints
Shows heater stone chamber, panel cleaning, and ventilation airflow paths.

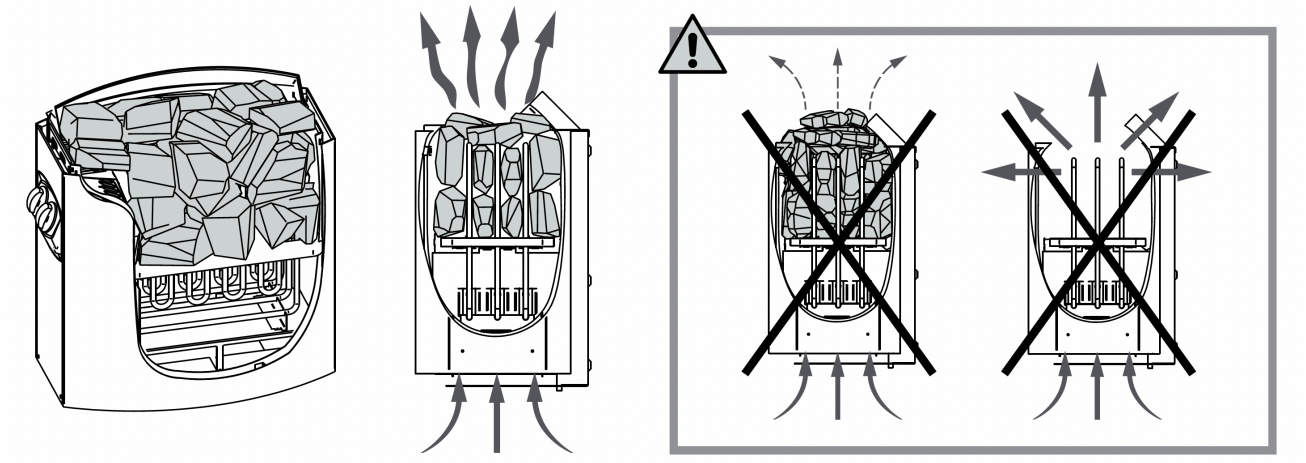

8 TROUBLESHOOTING

ISSUE	POSSIBLE CAUSE	ACTION
Heater not heating	Fuse or power issue	Check fuse, RCD, and power supply
Uneven heat	Stones too tight	Re-stack stones for airflow
Odour	New stone curing	Ventilate and clean stones
Wall darkening	Heat exposure	Normal beaviour
Overheat trip	Blocked airflow or faulty sensor	Cool down and reset

9 WARRANTY INFORMATION

- Heater: 2 years (residential) / 1 year (commercial)
- Sauna structure: 2 years
- Warranty void if installation or operation guidelines not followed.



10 FAQ'S

Can Madimack help me install my sauna?
Yes. Madimack provides professional installation support through our national partner network. We can coordinate delivery, electrical installation, assembly, and final commissioning to ensure your sauna is installed correctly and safely.

What electrical supply do I need for a traditional sauna?
A standard Madimack traditional sauna requires a 20-amp independent circuit installed by a licensed electrician. This ensures stable, reliable heater performance.

Does the burner and volcanic rocks come with the sauna?
Yes. Every Madimack sauna includes a heater and volcanic rocks that are specifically matched to the sauna's size, internal volume, and construction to ensure correct heat-up time and performance.

How hot can a traditional Madimack sauna get?
Madimack traditional saunas are designed to reach 70–75°C, which is the optimal temperature range for a traditional Finnish-style sauna experience.

How long does a Madimack sauna take to heat up?
Typically, a Madimack sauna reaches its operating temperature in approximately 45 minutes, depending on the model and installation environment.

Can the sauna be installed outdoors?
Yes. Madimack outdoor saunas are purpose-engineered for external installations and include weatherresistant cladding and a dedicated shingle set for additional environmental protection.

How do I maintain Japanese cedar?
Japanese cedar is naturally suited to sauna environments due to its stability and resistance to moisture. Maintenance guidelines include:
- Do not apply varnish or polyurethane.
- Clean with a soft damp cloth as needed.
- Use mild wood-safe cleaners.
- Allow the sauna to dry between sessions with the door open.
- Light sanding of high-use areas can restore the timber surface over time.

Where should I install my sauna?
Install on a stable, level surface with adequate clearance as specified for your model. Ensure proper access to electrical supply, sufficient ventilation around exterior walls, space for door movement, and safe access for installation and servicing. Madimack can assist in reviewing site suitability.

Do I need plumbing or drainage?
No plumbing is required. Traditional saunas operate using dry heat and natural ventilation, with no plumbing connection needed.

How much space do I need?
Most models require 5–10 cm of clearance around the sides for ventilation, along with adequate space for door swing and service access. Detailed spacing requirements are provided for each sauna model.

What is the warranty on Madimack saunas?
Madimack provides warranty coverage on structural components, heaters, and control systems. Warranty terms vary by model and are outlined in the product documentation.

Can I assemble the sauna myself?
Yes. Madimack saunas are delivered in pre-fabricated panels designed for efficient assembly. However, all electrical work must be completed by a licensed electrician.

Is a traditional sauna safe for daily use?
Yes. When used according to guidelines, daily sauna use is safe for most individuals. Users should maintain hydration, observe recommended session durations, and consult a medical professional regarding any health concerns. All Madimack heaters are equipped with safety and thermal protection systems.

Can I pour water over the volcanic rocks?
Yes. Madimack volcanic rocks are suitable for generating steam when water is applied. Only use clean water, and do not apply oils or additives directly to the rocks.

Does a sauna significantly increase home energy usage?
Sauna heaters are energy-efficient relative to their output. Typical operating sessions run between 45–90 minutes, resulting in moderate energy consumption similar to other heating appliances.

madimack

For installation or warranty assistance: Madimack Pty Ltd
PH: 1300 899 737
Email: support@madimack.com.au
Website: www.madimack.com.au

AU-V01-621111

Madimack Manufacturer's Warranty

This is a warranty against defects, given in addition to your rights under the Australian Consumer Law.

Warrantor: MADIMACK PTY LIMITED, ABN 20 602 694 520 — Lvl 1/50 Berry St, North Sydney NSW 2060. Phone: 1300 899 737. Email: support@madimack.com.

Coverage area: This warranty applies only to genuine Madimack products purchased new in Australia and installed in Australia. This warranty applies to residential installations and commercial installations where applicable; see the commercial conditions in the Warranty Schedule.

Consumer Guarantees (Australian Consumer Law)

Our goods come with guarantees that cannot be excluded under the Australian Consumer Law.

You are entitled to a replacement or refund for a major failure and compensation for any other reasonably foreseeable loss or damage.

You are also entitled to have the goods repaired or replaced if the goods fail to be of acceptable quality and the failure does not amount to a major failure.

The benefits given to you by this warranty are in addition to your other rights and remedies under a law in relation to the goods to which this warranty relates. Nothing in this warranty excludes, restricts or modifies those rights and remedies, and they continue to apply after the warranty period ends or if this warranty does not apply.

What's Covered

This warranty covers components that fail because of a manufacturing defect that appears within the warranty period.

Where the law or the product manual requires it, installation, winterisation and repairs must be done by suitably qualified and licensed person(s). Routine owner maintenance, such as cleaning strainer baskets and filters, inspecting and lubricating accessible o-rings, inspecting external plumbing fittings, and maintaining water chemistry within the recommended ranges, may be performed by the owner. Owner maintenance does not include opening cabinets, access panels or electrical control boxes, or working on the sealed refrigeration circuit. That work must be done by suitably qualified and licensed person(s).

Suitably qualified and licensed person(s) — Defined as person(s) who hold any licence, registration or certification that the law of the state or territory where the product is installed requires for that work (for example, electrical or plumbing work).

Typical coverage includes:

- **Pool pumps:** Motor, housing, drivers, shaft seals, or internal components that fail prematurely due to manufacturing defects.
- **Filters:** Filter tank cracks or structural failure due to a manufacturing defect. Filter media, cartridges, and grids are wear items — see Consumable & Wear Items below.
- **Heat pumps:** Heat exchangers, compressors, controls, or other components that fail due to a manufacturing defect.
- **Pool sanitisers:** Controller, cell, and other components that fail due to a manufacturing defect.
- **Robotic pool cleaners:** Motors, drive systems, and electronic components that fail due to a manufacturing defect.

- **Hot water heat pumps:** Electrics, compressors, tanks, or other components that fail due to a manufacturing defect.
- **Chillers:** Heat exchangers, compressors, or other components that fail due to a manufacturing defect.
- **Dehumidifiers:** Heat exchangers, compressors, or other components that fail due to a manufacturing defect.
- **Mowers:** Components that fail due to a manufacturing defect, and consumables for the period shown in the Warranty Schedule.
- **Pool accessories:** Components that fail due to a manufacturing defect.

Warranty periods: Warranty periods for parts and labour vary by product. See the Warranty Schedule (Appendix) for the exact period that applies to your product. For example, if the Warranty Schedule shows 7 years for all parts and 1 year for on-site labour, the parts warranty runs for 7 years and the on-site labour warranty runs for the first year. The warranty periods in the Warranty Schedule are Madimack's express warranty periods. They are separate from, and in addition to, your rights under the Australian Consumer Law.

Warranty Remedy: If a covered defect appears within the warranty period, Madimack will, at its option, repair or replace the defective part or component. If a defect cannot be repaired, Madimack may replace the product with the same or an equivalent model. Repair or replacement of a part, or replacement of the product, does not extend or restart the original warranty period; a replacement carries the balance of the original period. This does not limit your rights under the Australian Consumer Law.

Service calls: There is no charge for a service call to repair a covered defect. If you request a service call and the technician's written inspection report finds no fault with the product, or finds that the problem was caused by something other than a defect in the product (for example, misuse, installation or water chemistry), a call-out fee of $220 AUD, including GST, applies and is payable directly to the technician. The fee will be disclosed to you, and you must accept it, before the visit is booked. You may request a copy of the report. This does not limit your rights under the Australian Consumer Law.

Travel to remote locations: There is no charge for travel for a service visit to repair a covered defect. If you request a service visit that is not for a defect or failure in the product, and the product is installed more than 30 km from the nearest authorised repair agent listed at madimack.com/au/support/service-finder when the visit is booked, Madimack may charge $2 AUD, including GST, per kilometre for the one-way distance beyond 30 km. Madimack will tell you the cost before the visit is booked, and you must accept it before the visit goes ahead. This does not limit your rights under the Australian Consumer Law.

Warranty begins on the date of purchase, and proof of purchase date is required to make a claim.

Product registration is optional. It helps with proof of purchase and faster claims, but it is not a condition of this warranty.

Spare parts and repair: Madimack will take reasonable action to ensure that facilities for the repair of the product, and spare parts for it, are reasonably available for a reasonable period after the product is supplied, as required by the Australian Consumer Law.

Consumable & Wear Items

Consumable and wear items — including o-rings, seals, gaskets, basket strainers, pump mechanical seals, filter cartridges and elements, and cleaner wear parts — are not covered under this warranty except where they show a defect in materials or workmanship at the time of installation. Routine

inspection, lubrication, and replacement of these items is the owner's responsibility as part of normal maintenance. This exclusion applies to this warranty only and does not limit your rights under the Australian Consumer Law. Where the Warranty Schedule shows a warranty period for consumables, that period applies.

Other Terms

This is the only warranty against defects given by Madimack, other than any separate written guarantee that Madimack expressly gives you. No dealer, distributor, installer, or other party is authorised to give any other warranty against defects on Madimack's behalf.

Governing Law: This warranty is governed by the laws of the state or territory of Australia in which the product was purchased, together with applicable Commonwealth law, including the Australian Consumer Law.

Who Is Covered

This warranty extends only to the original retail purchaser, is not transferable to any subsequent owner, and applies only at the product's original installation address.

What's Not Covered

This warranty does not cover defects or damage caused by any of the following. Madimack may decline a claim on these grounds only where the listed cause is shown to have caused the defect or damage. If this warranty does not apply to a claim, your rights under the Australian Consumer Law are not affected:

Installation & Sizing

- Improper installation
- Improper sizing
- Damage occurring during transit, delivery, or installation, prior to startup

Water Chemistry & Environment

- Freezing
- Improper pool water chemistry — corrosion, erosion, scaling, calcification, or other conditions caused by unbalanced water chemistry (for example, corrosion or scaling of cell plates or the heat exchanger)
- Recommended ranges: pH 7.2–7.8 (ideal 7.4–7.6); Total Alkalinity 80–120 ppm (100–150 ppm for vinyl pools); Calcium Hardness 200–400 ppm; Cyanuric Acid 0–100 ppm; Total Dissolved Solids under 1,500 ppm (excluding salt).
- Corrosion or damage to the product caused by a corrosive or contaminated environment (for example, salt air, chemicals stored near the product, debris, vegetation or blocked airflow)

Use, Maintenance & Modifications

- Unauthorised modifications
- Normal wear and tear
- Failure to maintain the equipment
- Damage caused by the use of parts or accessories not authorised by Madimack, or by service performed by anyone other than suitably qualified and licensed person(s) where the law or the product manual requires one

- Damage caused by unauthorised changes to the product's software or firmware
- Operating the product outside its published flow rate, voltage, or environmental specifications
- Faults in other equipment connected to the product (for example, the pool pump, plumbing or power supply)

Accidents & Force Majeure

- Accidental damage, fire, storms, or other acts of God
- Damage from power surges or electrical problems
- Damage caused by running equipment without adequate water flow
- Physical damage, abuse, or negligence
- Damage caused by animals, insects or vermin

Cosmetic Condition

- Product discolouration or other cosmetic or superficial condition, regardless of cause, is not covered by this warranty

How to Make a Warranty Claim

To be entitled to claim: the product must be a genuine Madimack product purchased new in Australia and installed in Australia (and, where the law or the product manual requires installation by suitably qualified and licensed person(s), installed by such a person), its serial number label must be present and legible, the defect must appear within the warranty period, and you must provide the original proof of purchase showing the date of purchase, the product model and the serial number.

Heat pump servicing: Madimack recommends that a heat pump is serviced at least once every 12 months from the date of purchase by suitably qualified and licensed person(s), at your cost, and that you keep the service invoice or service report. If a service is missed, or you cannot provide the service records on request, Madimack may decline claims for defects of a kind that servicing is designed to prevent (for example blockage, corrosion, scaling or contamination of coils, heat exchangers, fans or filters). This does not affect your rights under the Australian Consumer Law.

Proof of installation: where installation by suitably qualified and licensed person(s) is required, proof that the product was installed by such a person: their business name and contact details, their licence or registration number where state, territory or local law requires one, the installation date and the installation invoice or, if the invoice is unavailable, other reasonable proof of installation.

On request, within a reasonable time, you must provide:

- evidence that the installation meets the manual supplied at purchase;
- water chemistry test records, maintenance records and, for heat pumps, annual service records for the period before the fault;
- photos or video of the fault and the serial label;
- access for inspection; and
- the failed part, with a supplied GRA number.

Notify Madimack within a reasonable time after you find the fault, and do not repair, modify or dismantle the product before contacting Madimack. A claim will not be approved until the information is provided. If Madimack asks for it in writing and it is not provided within 30 days of the request, Madimack may decline the claim under this warranty. This does not affect your rights under the Australian Consumer Law.

Safe access: You must make sure the product is in a safe location where it can be inspected, tested and repaired. Madimack and its authorised repair agents may postpone or decline to attend, or may stop work on, a service visit where the site is unsafe (for example, because of unrestrained pets, confined spaces, work at heights, or other environmental hazards). If the product cannot be safely inspected or tested on site, you may be asked to return it to Madimack's testing warehouse, and Madimack may decline the claim until it can be inspected. Madimack covers the cost of freight for returning the product only if Madimack has approved the return in advance. This does not affect your rights under the Australian Consumer Law.

To make a claim: submit a claim through our Support Request page at madimack.com/au/support/servicerequest/productcategory. You can also contact Madimack on 1300 899 737 or support@madimack.com. Your installing dealer may help you lodge a claim, but Madimack assesses all claims.

Consumer guarantee claims: If a product does not meet a consumer guarantee under the Australian Consumer Law, you can contact the retailer you bought it from, or contact Madimack directly using the details above.

What Madimack will do: Madimack will assess your claim and, where the defect is covered, repair or replace the defective part or component as set out under Warranty Remedy. Where a service visit is needed, Madimack will arrange for an authorised repair agent, an independent business engaged by Madimack, to attend. Madimack remains responsible for its obligations under this warranty. If Madimack declines a claim, it will tell you why in writing and give you a copy of the technician's report on request.

A Goods Return Authorisation (GRA) number is required before returning any product or part for warranty evaluation.

Claim Expenses: Under this warranty, Madimack bears the cost of replacement parts; the cost of collecting any part or product that Madimack has approved or asked to be returned (Madimack will arrange collection); and, during the on-site labour period shown for your product in the Warranty Schedule, the labour and the standard service call for a covered defect. Refrigerant is covered where it is needed to repair a covered defect; refrigerant lost for any other reason is not covered. Other consumables are covered only as set out under Consumable & Wear Items. The cost of access to the product for repair, replacement or inspection is not covered by this warranty. This includes moving or lifting the product to an accessible location (for example, a product installed on a roof) and the cost of cranes, scaffolding, elevated work platforms, or removing fences, walls or other obstacles. You can claim the reasonable expenses you incur in making a claim that Madimack is to bear under this warranty by emailing your receipts to support@madimack.com within 30 days of incurring them. Madimack does not pay expenses it has not approved in advance, except where the Australian Consumer Law requires. Madimack may accept later claims at its discretion. This does not limit your rights under the Australian Consumer Law, including your right to have a failure remedied at no cost to you and to be reimbursed reasonable costs where that law provides.

This warranty statement is effective from 1 October 2026. This warranty statement applies to all Madimack products purchased in Australia. If you purchased your product before that date, you are also entitled to the benefit of the warranty in force when you purchased it, and in each case the term that gives you the greater benefit applies. The version supplied with your product, or posted at madimack.com/au at the time of your purchase, is the version in force when you purchased it.

Appendix — Warranty Schedule

Pool Heat Pumps

Heat Pump Model	Heat Exchanger*	Compressor	All Parts	On-Site Labour
InverELITE V4	25 years	15 years	7 years	1 year

InverELITE V3	25 years	10 years	5 years	1 year
ELITE Silent (V2)	25 years	5 years	4 years	1 year
ECO series (pre Jan 2022)	25 years	3 years	2 years	1 year
InverECO	25 years	5 years	3 years	1 year
InverECO Plus	25 years	5 years	3 years	1 year
InverECLIPSE	25 years	5 years	4 years	1 year
InverECLIPSE Plus	25 years	5 years	4 years	1 year
InverELITE Max Series (commercial*)	25 years	5 years	2 years	1 year

*Residential heat pumps installed in public or commercial settings will have their warranty periods reduced to align with the commercial heat pump warranty terms.

Pool Pumps

Pool Pump Model	Warranty	On-Site Labour
InverFLOW Eco	3 years	1 year
InverFLOW Pro	4 years	1 year
InverFLOW Ultra	4 years	1 year
InverFLOW Plus	5 years	5 years
EFlow	4 years	1 year

Pool Sanitisers

Model	Controller & Cell
InverCHLOR	4 years* (*or 10,000 hours, whichever comes first)
pH Doser	1 year

Robotic Pool Cleaners

Robotic Pool Cleaner Model	Warranty
Madimack GT Freedom	3 years
Madimack GT Freedom Plus	3 years
Madimack GT560	2 years

Filters

Model	Tank	Parts	On-Site Labour
eliteCLEAR Media Filter	10 years	1 year	1 year
eliteCLEAR Cartridge Filter	3 years	1 year	1 year

Hot Water Heat Pumps

Model	Electrics	Compressor	Tank	On-Site Labour
resiSTEAM	5 years	3 years	5 years	1 year
resiSTEAM Pro	5 years	3 years	5 years	1 year

Chillers

Unit Model	Heat Exchanger	Compressor	Parts	On-Site Labour
Aquaciat LD	2 years	2 years	2 years	1 year
Aquaciat Power ST & HE LD	2 years	2 years	2 years	1 year

Powerciat LX	2 years	2 years	2 years	1 year

Dehumidifiers

Unit Model	Heat Exchanger	Compressor	Parts	On-Site Labour
Junior BCP	2 years	2 years	2 years	1 year
Aquair BCP	2 years	2 years	2 years	1 year
Air Master BCP	2 years	2 years	2 years	1 year
Aquair Premium BCP	2 years	2 years	2 years	1 year

Mowers

Model	Warranty
Madimack MOWER 750	2 years + 1 year consumables
Madimack MOWER 1500	3 years + 1 year consumables

Pool Accessories

Model	Warranty
Inverter Plus 1100	1 year
Inverter Plus 1500	1 year
Single pump controller (MJ Box)	2 years

Madimack warranty is from date of purchase for service and warranty claims.